10th International DAAAM Baltic Conference
"INDUSTRIAL ENGINEERING"
12-13 May 2015, Tallinn, Estonia

MULTI-POLE MODELING AND INTELLIGENT SIMULATION OF A HYDRAULIC DRIVE WITH THREE-DIRECTIONAL FLOW REGULATING VALVE

Harf, M. & Grossschmidt, G.

Abstract: *Composing of multi-pole model and simulation of a hydraulic drive with three-directional flow regulating valve is considered in the paper. Multi-pole mathematical model of a hydraulic drive is presented. An intelligent simulation environment CoCoViLa supporting declarative programming in a high-level language and automatic program synthesis is used as a tool. Simulation examples of a hydraulic drive are presented and discussed.*
Key words: *hydraulic drive, flow regulating valve, multi-pole model, intelligent programming environment, simulation.*

1. INTRODUCTION

Using and solving large differential equations systems in simulation of fluid power system dynamics is not wide spread. It is difficult to compose, guarantee the adequacy and solvability of such systems. In analysis and system synthesis frequently simplified, 3rd…5th order differential equation systems are used [1].
In the current paper an approach is proposed, which is based on using multi-pole models with different oriented causalities [1] for describing components of different levels. Components of the lowest level are hydraulic resistors, tubes, hydraulic interface elements, directional valves, etc [2]. Hydraulic control valves of different types [3] are used as components of the higher level. In such a way models of complex systems can be built up hierarchically.
A special iteration technique is used that allows avoid solving large equation systems during simulations. Therefore, multi-pole models of large systems do not need considerable simplification.
Modeling and simulation of a hydraulic drive including a three-directional flow regulating valve is considered as an example of applying proposed methodology.

2. MULTI-POLE MODELS

In general a multi-pole model represents mathematical relations between several input and output variables (poles). The nearest to physical nature of various technical systems is using multi-pole mathematical models of their components and subsystems [1].
The multi-pole models of the components describe the ports, which have oriented input and oriented output variables in pair, as it is in most real physical systems. Multi-pole models enable to express both direct actions and feedbacks.
The multi-pole model concept enables us to describe mathematical models graphically which facilitates the model developing.

3. SIMULATION ENVIRONMENT

CoCoViLa is a flexible Java-based intelligent simulation environment that includes different simulation engines and is intended for creating and performing simulations in various engineering domains [4]. It provides visual tools and supports full automatic program construction from specifications that are given visually [5].

4. THREE-DIRECTIONAL FLOW REGULATING VALVE

Flow regulating valves [6, 7] are used when the working speed of hydraulic drive should remain almost constant in case of different loads at the user.

Three-directional flow regulating valve (Fig. 1) contains adjustable throttle and connected in parallel pressure compensator ensuring constant pressure drop in the throttle. In addition to keeping output volumetric flow constant it keeps pressure at the pump proportional to the load force.

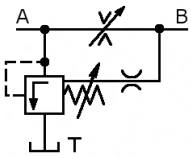

Fig.1. Functional scheme of a three-directional flow regulating valve

In Fig.2 three-directional flow regulating valve of Mannesmann Rexroth is shown.

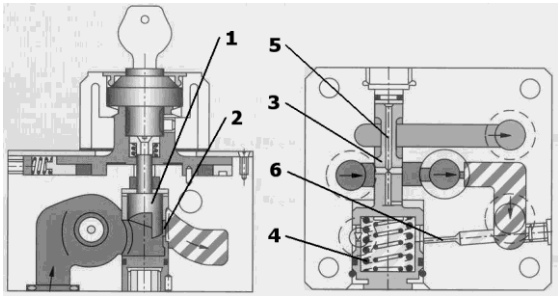

Fig.2. Three-directional flow regulating valve

The valve consists of the throttle pin 1 with orifice 2, normally closed regulating spool 3 with two springs 4, bores 5 and 6 to the spool surfaces.

Multi-pole model of a three-directional flow regulating valve is shown in Fig.3.

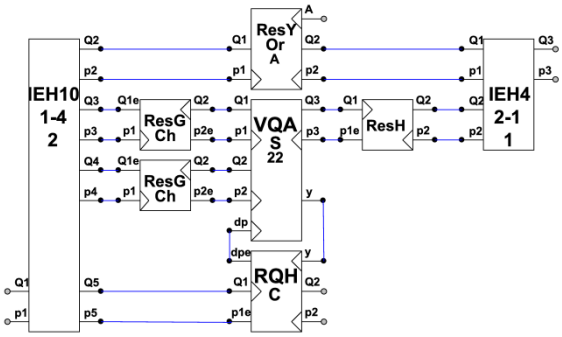

Fig.3. Multi-pole model of a three-directional flow regulating valve

Multi-pole models of components:
ResYOrA – regulating orifice, VQAS22 – pressure compensator spool, RQHC – pressure compensator spool slots, ResGCh, ResH – cushioning resistors, IEH10-1-4-2, IEH4-2-1-1 – interface elements.

Multi-pole mathematical models of control valves of fluid power systems are considered in [2, 3]. Exceptions concerning components used here are described below.

VQAS22 differs from **VQAS21** [3] as follows. **VQAS21** is normally open pressure compensator spool but **VQAS22** is normally closed pressure compensator spool.

In **VQAS21** displacement of the pressure compensator spool

$$y1 = 1 / (1 - B) * (F / c - fV0),$$

pressure compensator spool slot width

$$y = y0 - y1.$$

In **VQAS22**

$$y1 = 1 / (1 + B) * (F / c - fV0), \quad y = y1.$$

Pressure compensator spool slot RQHC
Inputs: pressure $p2$, displacement y of the pressure compensator spool, volumetric flow $Q1$.

Outputs: pressure $p1e$, pressure drop dpe in poppet-valve slot, volumetric flow $Q2$.

Through-flow area of the pressure compensator spool slot

$$A = Pi * d1 * y * \sin(\beta * Pi / 180),$$

where
d1 diameter of the spool sleeve,
β half of spool cone angle.

Turbulent flow resistance

$$RT = \rho / (2 * \mu^2 * A^2),$$

where
ρ fluid density,
μ discharge coefficient.

Output pressure

$$p1e = p2 + (RT * abs(Q1)) * Q1.$$

Difference of pressures:

$$dpe = p1e - p2.$$

5. HYDRAULIC DRIVE WITH THREE -DIRECTIONAL FLOW REGULATING VALVE

Functional scheme of a hydraulic drive with three-directional flow regulating valve is shown in Fig.4.

The pump **PV** is driven by electric motor **ME** through clutch **CJh**. The outlet of the pump is provided with three-directional flow regulating valve **FCV** and safety valve **SV1** (spool VS and throttle edge RV in Fig.5).

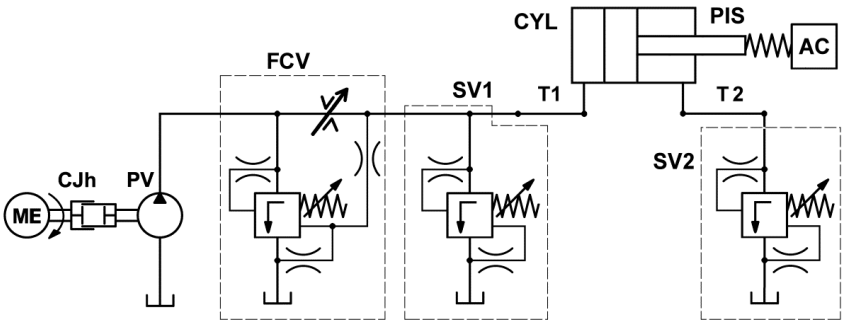

Fig.4. Functional scheme of a hydraulic drive with three-directional flow regulating valve

Tubes **T1** and **T2** are located in inlet and outlet of hydraulic cylinder **CYL**. Piston and actuator are denoted respectively as **PIS** and **AC**. Constant pressure in outlet of the cylinder is ensured by pressure valve **SV2**.

6. SIMULATION OF STEADY STATE CONDITIONS

Simulation task of steady state conditions of a hydraulic drive with three-directional flow regulating valve is shown in Fig.5.

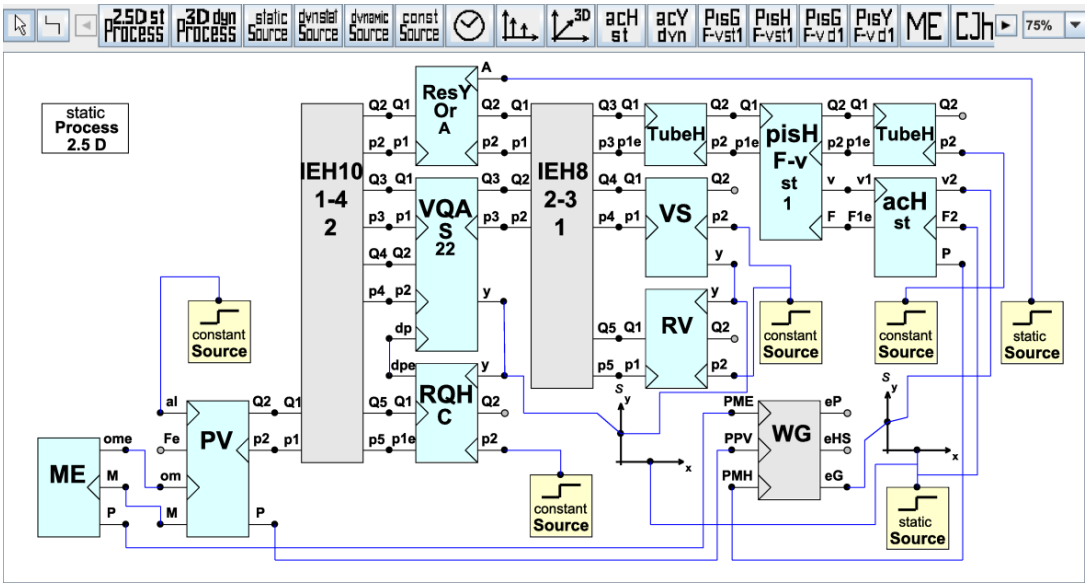

Fig.5. Simulation task of a hydraulic drive with three-directional flow regulating valve for steady state conditions

Multi-pole models: **ME-** electric motor, **PV** - axial-piston pump, **ResYOrA** – regulating throttle orifice, **VQAS22** – pressure compensator spool, **RQHC** – pressure compensator slot, **VS** – safety valve spool, **RV** – throttle edge of safety valve spool, **pisH_F-v_st1** – piston, **acH** – actuator, **TubeH** – tube, **IEH10-1-4-2**, **IEH8-2-3-1** – interface elements, **WG** – efficiency coefficient calculator [2, 3, 8, 9].

Inputs: outlet pressures *p*2, regulating orifice area *A*, constant position angle *al* of the pump regulating swash plate.

Outputs: actuator velocity *v*2, efficiency coefficient *eG* of the entire hydraulic drive.

Simulation manager: static Process 2.5D.

The following parameter values are used for steady state simulations.

For **VQAS22:** d1=0.008 m, d2=0.03 m, μ=0.8, β=30 deg, ds1=0.003 m, Ds1=0.022 m, n1=5, ds2=0.0025 m, Ds2=0.014 m, n2=4, G=8e11 N/m, m=0.04 kg, kfr=2e-9 N/Pa, Ff0=3 N, h=5 Ns/m.
For **RQHC:** d1=0.015 m, d2=0.012 m, μ=0.7, β=30 deg.
For **ResYOrA:** μ=0.7.
For **TubeH:** d= 0.019 m, l= 2 m.
For **pisH_F-v_st1:** piston diameter dpi= 0.10 m, diameters of rods dr1= 0 m, dr2= 0.056 m, piston friction force Ffpi= 100 N, rod friction force Ffr= 50 N.
For **acHst:** Ffr= 100 N, h= 100 Ns/m.
For **VS:** d= 0.008 m, spring stiffness c= 8950 N/m, preliminary deformation of spring fV0= 0.00722 m, h= 20 Ns/m.
For **RV:** d=0.008 m, μ=0.8, β=45 deg.

Results of simulation of steady state conditions depending on the load force for three different values of the regulating orifice area A = (18, 10, 2) e-6 m^2 are shown in Fig.6 and Fig.7.

In Fig.6 graphs of actuator velocities (graphs 1) and efficiency coefficients (graphs 2) are shown.

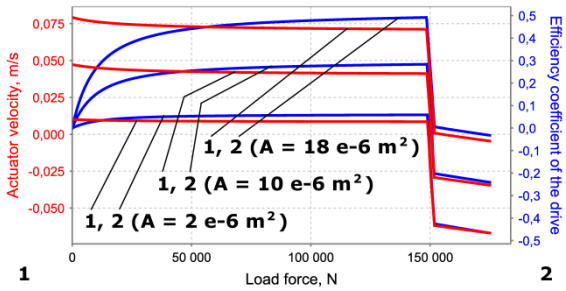

Fig.6. Graphs of simulations of steady state conditions

Three-directional flow regulating valve (FCV in Fig.4) causes actuator velocity to remain almost constant. After opening the safety valve (SV1 in Fig.4), actuator moves backward (actuator velocity becomes negative). Increasing the load force causes efficiency coefficient to rise.

In Fig.7 graphs of pressure compensator spool displacements (graphs 1) and safety valve spool displacement (graph 2) are

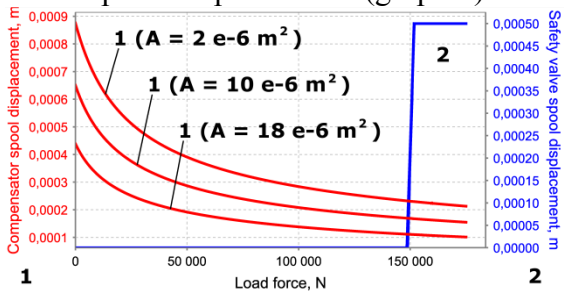

Fig.7. Graphs of spool displacements

presented. Pressure compensator spool displacement decreases by increasing of the load force. The safety valve (SV1 in Fig.4) opens at load force of ~150 000 N.

6. SIMULATION OF DYNAMICS

Simulation task of a hydraulic drive with three-directional flow regulating valve for dynamics is shown in Fig.8.

Additional and different multi-pole models from steady state conditions: **CJh** – clutch, **TubeH**, **TubeY** – inlet and outlet tube, **pisY_F-v_dyn1** – piston, **cylY** – cylinder, **veZ1**, **veZ2** – volume elasticities of cylinder chambers, **acYdyn** – actuator, **IEH4-1-2-2**, **IEH4-2-1-2** – interface elements [2, 3, 8, 9].

Inputs: constant outlet pressures *p*2, load force *F*2, regulating orifice area *A*, constant position angle *al* of the pump regulating swash plate.

Outputs: actuator velocity *v*2, outlet volumetric flows *Q*2, cylinder position *xfi*.

Simulation manager: dynamic Process3D.

The following additional parameter values are used in dynamic simulations.

For **VQAS22:** m=0.04 kg.
For **ResYOrA:** A=1e-5 m^2.
For **ResGCh:** d= 0.0005 m, l= 0.02 m.
For **ResH:** d= 0.001 m, l= 0.02 m.
For **VS:** m= 0.02 kg, h= 20 Ns/m.
For **TubeH**, **TubeY:** d= 0.019 m, l= 2 m.
For **pisY:** elasticity of piston rod er2= 1e-10 m/N.
For **veZ1**, **veZ2:** lengths of cylinder chambers l1= l2= 0.2 m,
For **acYdyn:** m= 20 kg, h= 3e3 Ns/m.

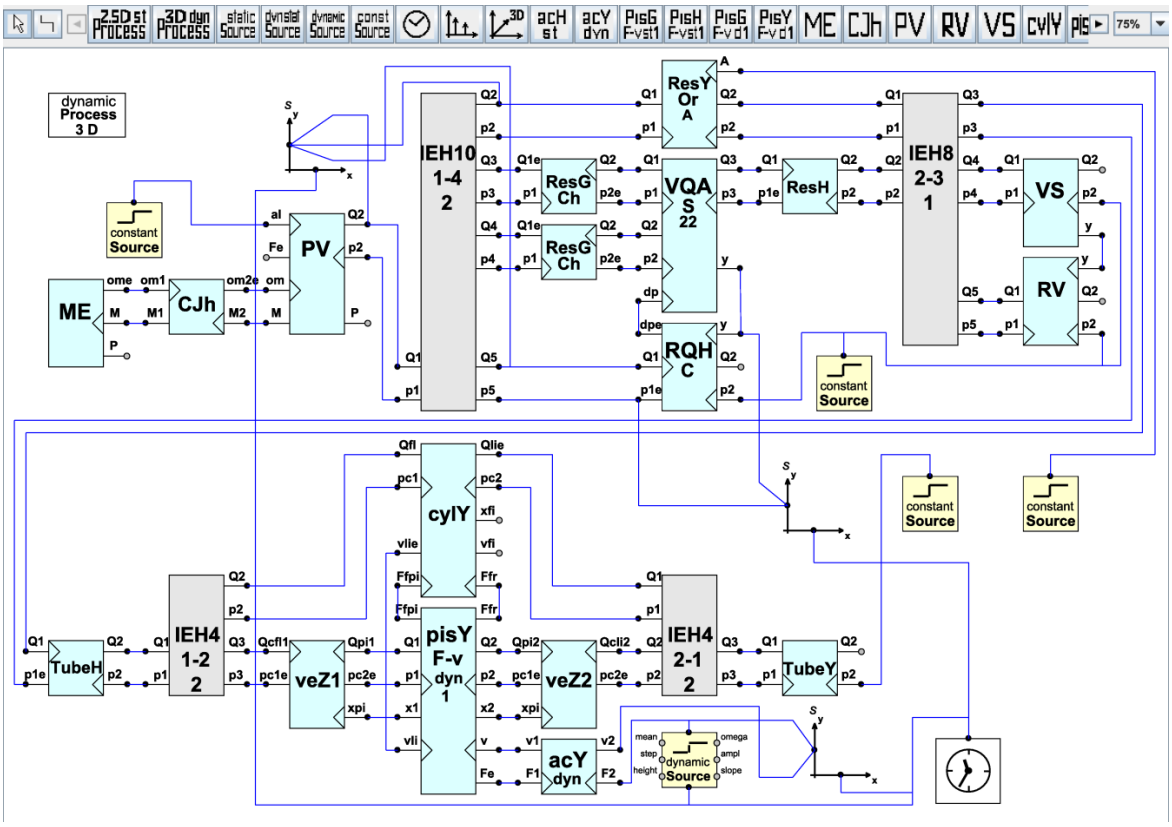

Fig. 8. Simulation task of dynamics of a hydraulic drive

Results of simulation of dynamic responses caused by applying the hydraulic drive with three-directional flow regulating valve actuator step load force $F2$ = 5E3 N (step time 0.05 s) as input disturbance are shown in Fig.9...Fig.11.

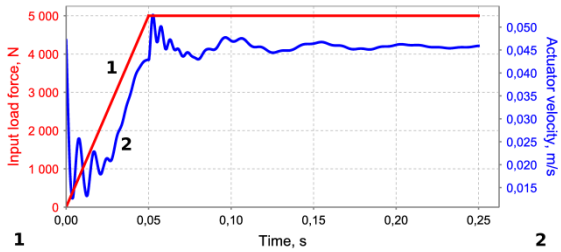

Fig.9. Graphs of actuator

Input load force step change (graph 1) initially causes actuator velocity (graph 2) to drop down. After load force rises to a new level, actuator velocity stabilizes.

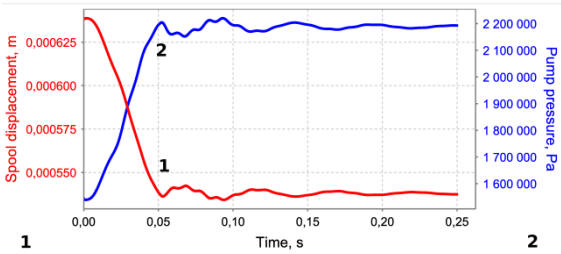

Fig.10. Graphs of flow regulating valve

Flow regulating valve spool (graph 1) takes a new position and causes pump pressure (graph 2) to rise.

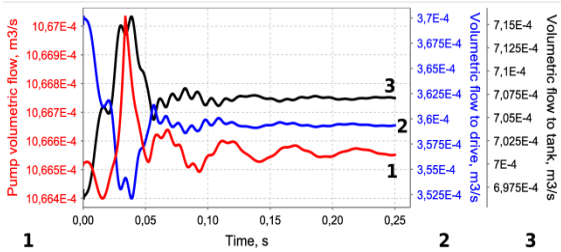

Fig.11. Graphs of volumetric flows

Pump volumetric flow (graph 1) divides into flow through regulating orifice to drive (graph 2) and flow to tank (graph 3).

5. CONCLUSION

In the paper modeling and simulation of a hydraulic drive with three-directional flow regulating valve is considered.

As experiments show, control valve parameters are to be adjusted for each particular case to attain the best performance of the hydraulic drive.

Control valve models e.g. those we described and used in the paper can be used

when composing models of fluid power systems whatever type.
Using methodology described here enables to try out different configurations and find optimal parameters in design and develop of fluid power systems.

6. ACKNOWLEDGEMENTS

This research has been partially supported by the *European Regional Development Fund* (ERDF) through:

- Estonian Centre of Excellence in Computer Science (EXCS).
- The project no 3.2.1201.13-0026 „Model-based Java software development technology“.
- The project no 3.2.1101.12-0012 „Smart composites - design and manufacturing“.

7. REFERENCES

[1] Grossschmidt, G. and Harf, M. *“COCO-SIM - Object-oriented Multi-pole Modeling and Simulation Environment for Fluid Power Systems, Part 1: Fundamentals”.* International Journal of Fluid Power, 10(2), 2009, 91 - 100.

[2] Grossschmidt, G.; Harf, M. *Simulation of hydraulic circuits in an intelligent programming environment (Part 1, Part 2).* 7th International DAAAM Baltic Conference "Industrial engineering”, 22-24 April 2010, Tallinn, Estonia, 148 -161.

[3] Harf, M. ; Grossschmidt, G. *Multi-pole Modeling and Intelligent Simulation of Control Valves of Fluid Power Systems (Part 1, Part 2).* In: Proceedings of the 9th International Conference of DAAAM Baltic “Industrial Engineering”; 24-26 April 2014, Tallinn, Estonia; (Ed.) Otto, Tauno, Tallinn; Tallinn University of Technology, 2014, 17-28.

[4] Kotkas, V., Ojamaa A., Grigorenko P., Maigre R., Harf M. and Tyugu E. *“CoCoViLa as a multifunctional simulation platvorm“,* In: SIMUTOOLS 2011 - 4th International ICST Conference on Simulation Tools and Techniques, March 21-25, Barcelona, Spain: Brussels, ICST, 2011, 1-8.

[5] Matskin, M. and Tyugu, E.. *Strategies of structural synthesis of programs and its extensions,* Computing and Informatics, Vol. 20, 2001, 1-25.

[6] Murrenhoff, H. *Grundlagen der Fluidtechnik,* Teil 1: Hydraulik, 4. neu überarbeitete Auflage. Institut für fluidtechnische Antriebe und Steuerungen, Aachen, 2005.

[7] Gebhardt, N., Will, D. and Nollau, R. *Hydraulik: Grundlagen, Komponenten, Schaltungen,* 5. Neubearb. Auflage, Springer Verlag Berlin Heidelberg, 2011.

[8] Grossschmidt, G.; Harf, M. *COCO-SIM - Object-oriented multi-pole modelling and simulation environment for fluid power systems. Part 2: Modelling and simulation of hydraulic-mechanical load-sensing system.* International Journal of Fluid Power, 10(3), 71 - 85.

[9] Grossschmidt, G.; Harf, M. *Effective Modeling and Simulation of Complicated Fluid Power Systems.* The 9th International Fluid Power Conference, 9. Ifk, March 24-26, 2014, Aachen, Germany, Proceedings Vol 2, 374-385.

AUTHORS

Mait Harf

Institute of Cybernetics, Tallinn University of Technology, Akadeemia tee 21, 12618 Tallinn, Estonia**,** E-mail**:** mait@cs.ioc.ee

Gunnar Grossschmidt

Institute of Machinery, Tallinn University of Technology, Ehitajate tee 5, 19086 Tallinn, Estonia,
E-mail**:** gunnar.grossschmidt@ttu.ee